PUBLISHED: 16-AUG-2017
2017.0 DISCOVERY (LR), 307-01

AUTOMATIC TRANSMISSION/TRANSAXLE - VEHICLES WITH: 8HP45 8-SPEED AUTOMATIC TRANSMISSION AWD

TRANSMISSION FLUID DRAIN AND REFILL - V6 S/C 3.0L PETROL (G1772186)

GENERAL PROCEDURES

44.24.02	LUBRICATION SYSTEM - DRAIN AND REFILL	3000 CC, AJ V6 (AJ126)	1.2	USED WITHINS

transmissionmanuals.com

SPECIAL TOOL(S)

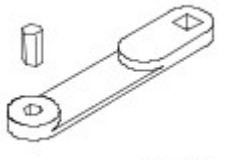

307-452

Wrench, Transmission Filler Plug

PART(S)

STEP	PART NAME	QUANTITY

Step 14	Transmission plug service kit	1

WARNING:

Observe due care when draining, as the fluid can be very hot.

NOTE:

Make sure that the transmission is not in the default mode, if this is the case, stop and correct the cause first and then restart the fluid level check.

1.

- The following steps must be observed before starting the transmission fluid level check.
- The vehicle must be on a horizontal ramp.
- Make sure that the electric park brake (EPB) is applied.
- Make sure the transmission control switch (TCS) is in the Park (P) position.

2.

WARNING:

Make sure the vehicle is supported on axle stands.

Raise and support the vehicle.

transmissionmanuals.com

3.

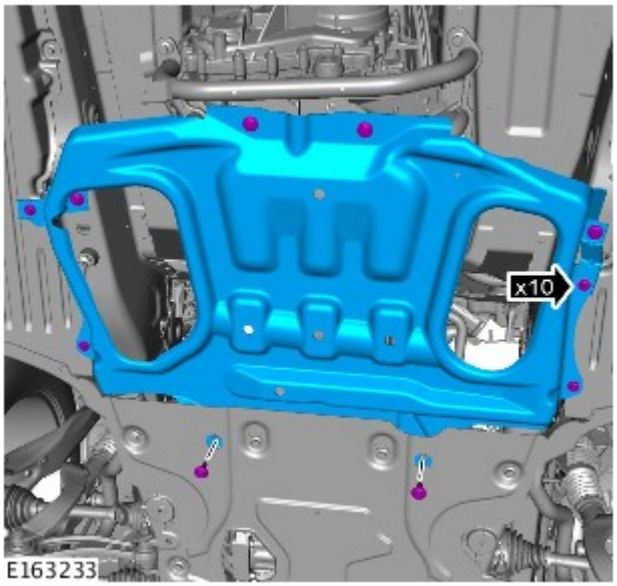

4.

NOTE:

If equipped.

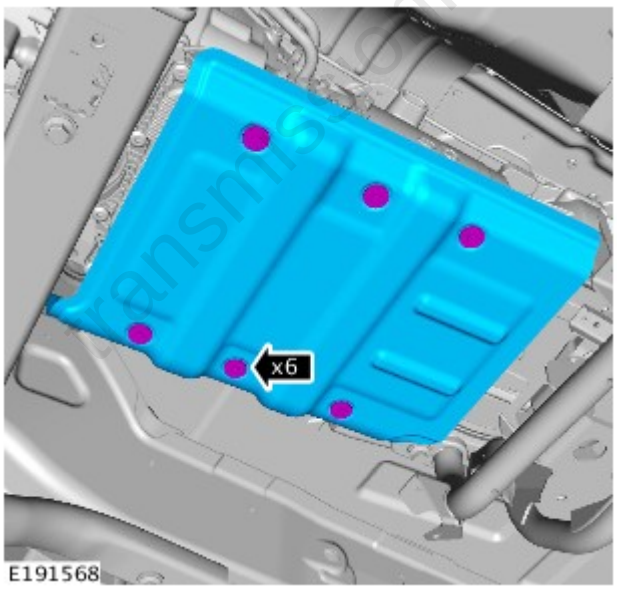

5. Lower the vehicle.

transmissionmanuals.com

6.

1. Connect Land Rover approved diagnostic equipment to the vehicle.
1. Start the engine and allow to idle.
1. Switch off the air conditioning (A/C) system and other electrical components.

7.

- Apply and hold the brake pedal.
- Select reverse gear and wait for 10 seconds.
- Select drive, then manual 1st gear and wait for 10 seconds.
- Select 2nd gear and wait for 10 seconds.
- Select Park (P) on the TCS.
- Raise the engine speed to 2000 rpm and hold for 30 seconds. Then return to idle speed.

8.

CAUTION:

Using Land Rover approved diagnostic equipment, make sure the transmission temperature is between 30°C (85°F) and 50°C (122°F) before starting the fluid level check.

- Using Land Rover approved diagnostic equipment, check the transmission fluid temperature.
- If the transmission oil temperature is lower than 30°C (86°F). Allow the transmission to warm up above 30°C (86°F) with the engine idling in the P position, once at temperature proceed with the transmission fluid drain.
- If the transmission oil temperature is above 50°C (122°F), switch off the engine and allow the transmission to cool down, then repeat steps 7 and 8.

9. Switch the engine off.

10. Raise and support the vehicle.

11. Place a container under the transmission.

transmissionmanuals.com

12.

CAUTION:

Only continue with the fluid drain if the transmission temperature is between 30°C (86°C) and 50°C (122°).

NOTE:

Use a suitable container to collect escaping fluid.

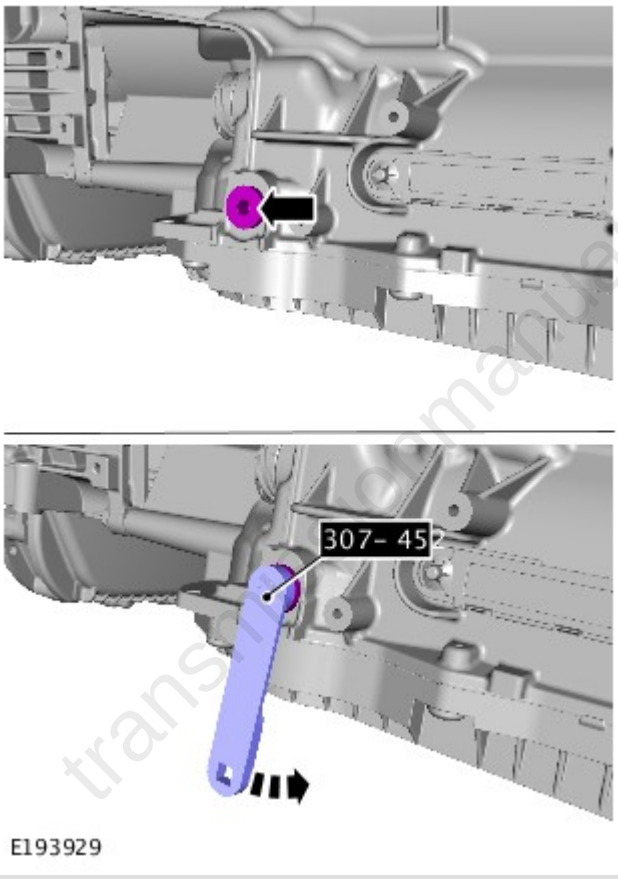

1. Remove the oil filler plug, do not discard.
   Special Tool(s): 307-452

13.

WARNING:

Discard the transmission fluid drain plug.

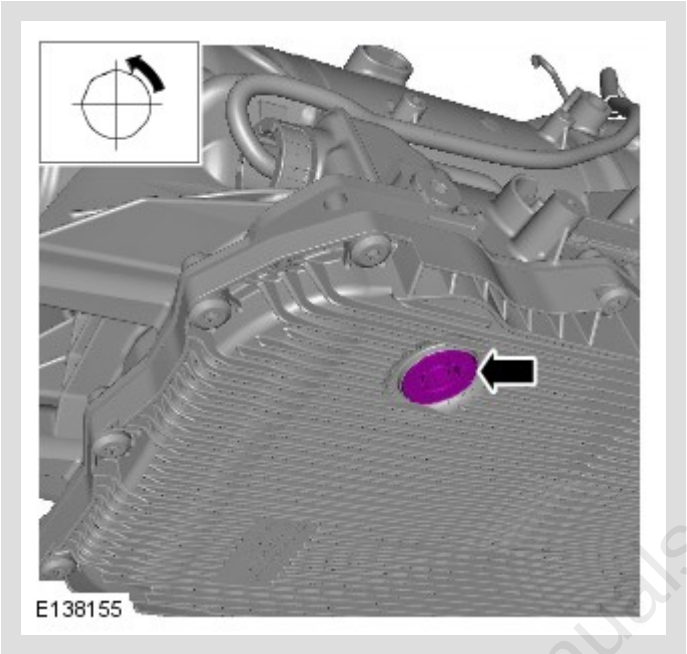

- Allow the fluid to drain in to a container.

transmissionmanuals.com

14.

NOTE:

Install a new transmission drain plug

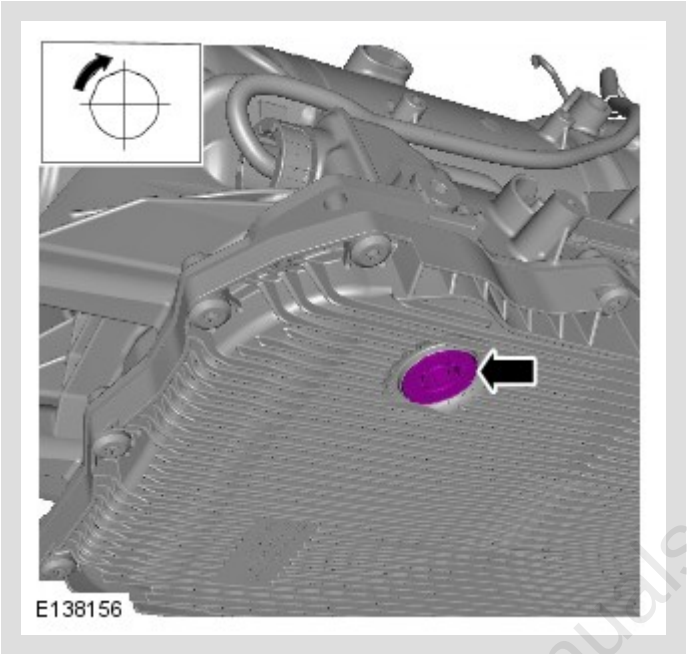

Renew Part: *Transmission plug service kit* *Quantity:* *1* .
Torque: **8 Nm**

transmissionmanuals.com

15.

CAUTION:

Make sure the correct specification and quantity of oil is used.

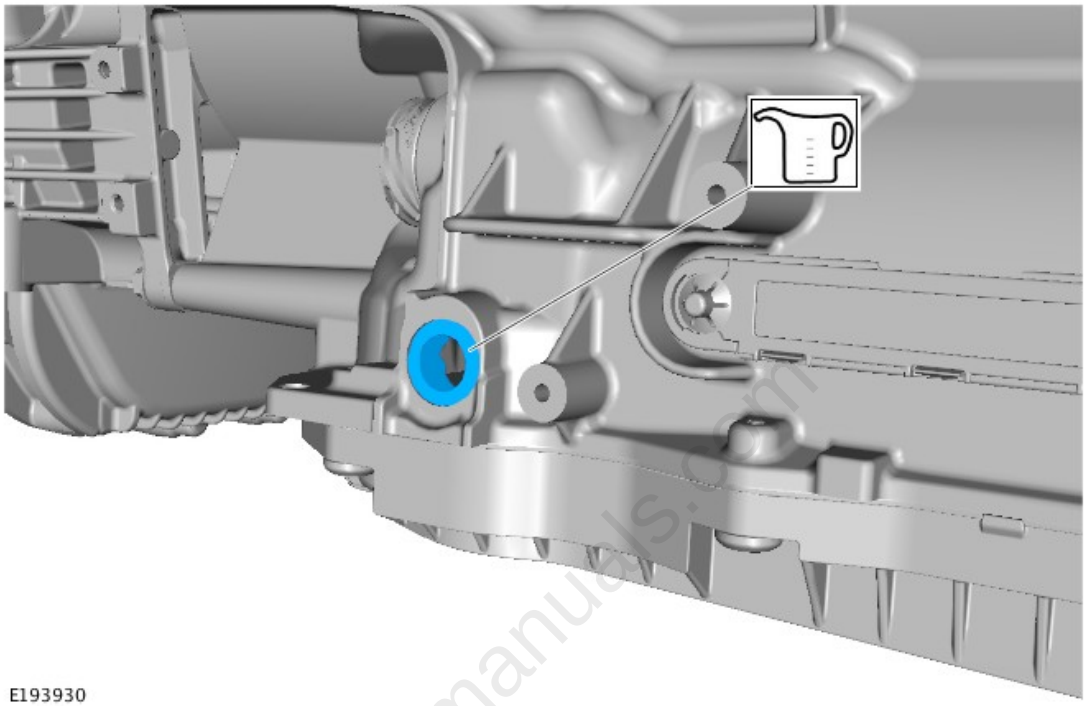

- Fill the transmission with the recommended transmission oil until fluid flows out of the oil filler hole. Refer to fluid specification.
  Refer to: Specifications (307-01 Automatic Transmission/Transaxle - Vehicles With: 8HP45 8-Speed Automatic Transmission AWD, Specifications).

transmissionmanuals.com

16.

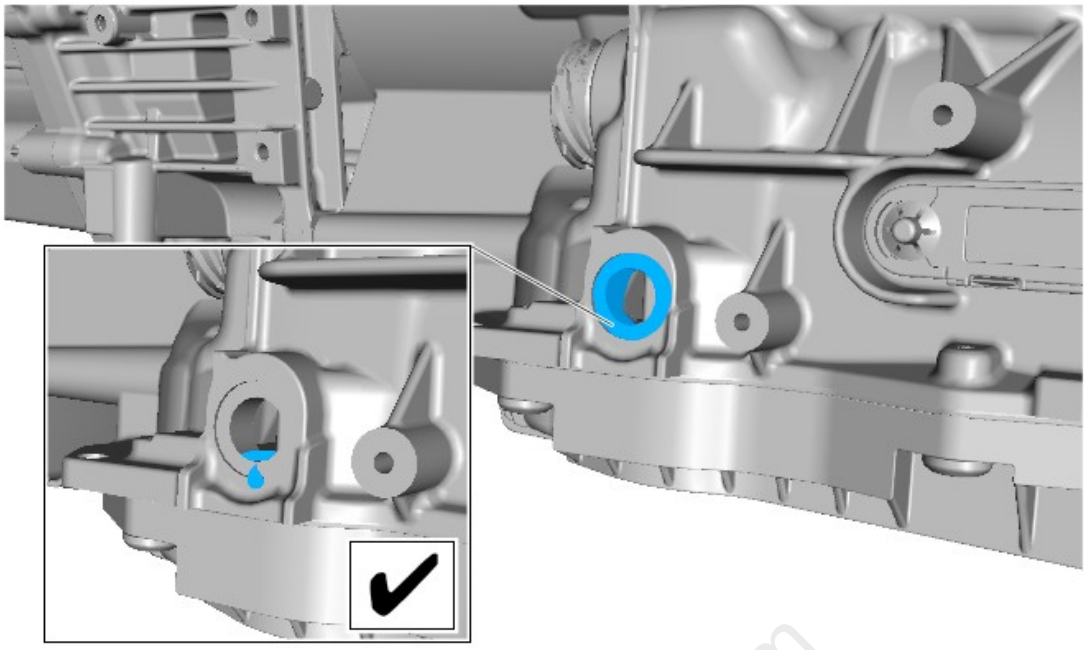

E193931

- Allow the transmission fluid to drain from the oil filler hole until the flow stops.
- Install the fluid level plug, only finger tight at this stage.
- Remove the container from under the transmission to avoid damage.

17. Repeat steps 7 through to 12.

transmissionmanuals.com

18.

CAUTION:

Only continue with the fluid level check if the transmission temperature is between 30°C (86°C) and 50°C (122°).

NOTE:

Use a suitable container to collect escaping fluid.

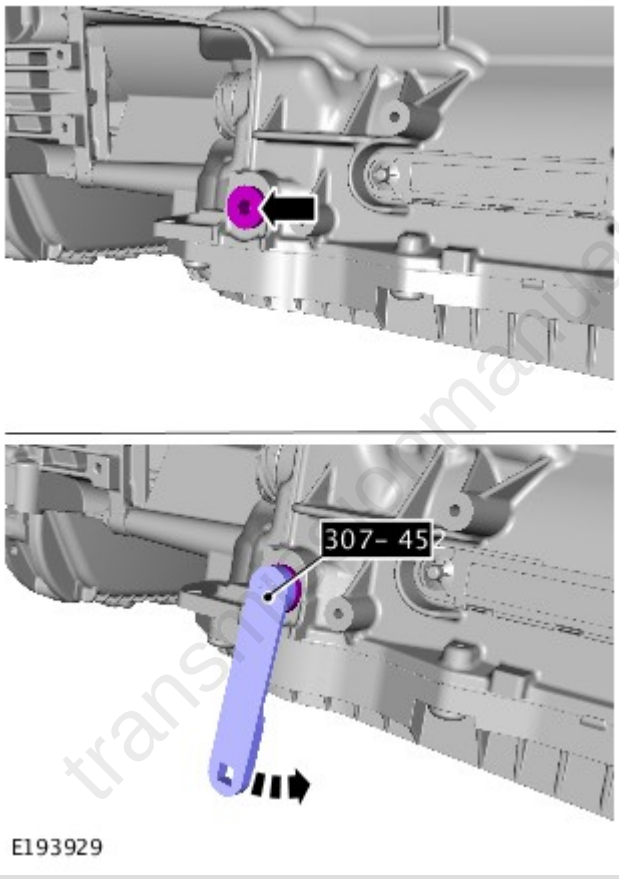

1. Remove the oil filler plug, do not discard.
1. If fluid flows out of the oil filler hole, proceed to step 19.
1. If fluid does not flow out of the oil filler hole, proceed to step 15
   Special Tool(s): 307-452

19.

NOTE:

Install the original oil filler plug.

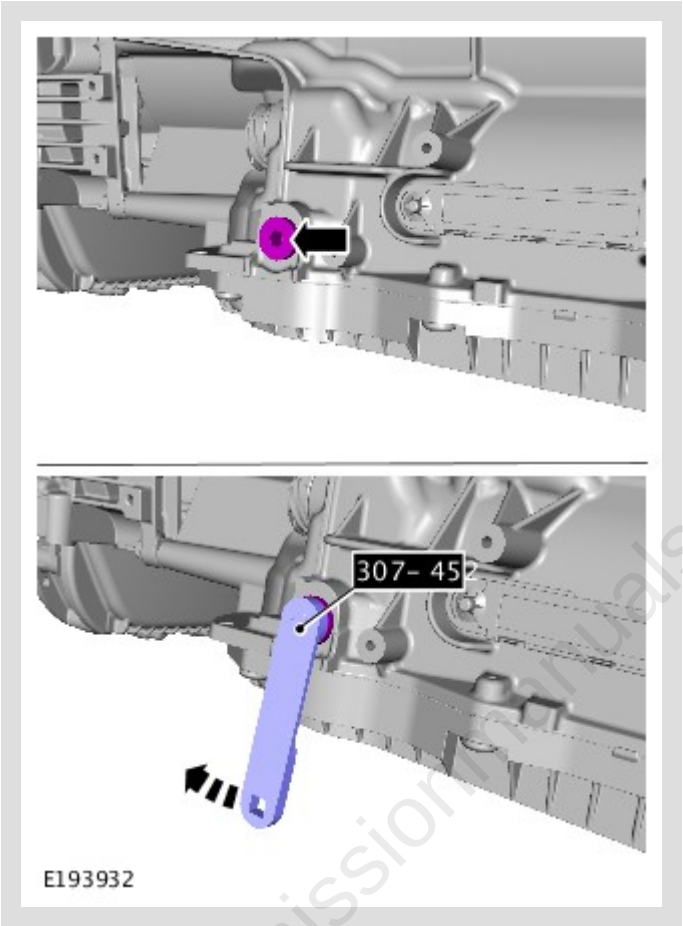

- Using the special tool, install the original oil filler plug.
- *Special Tool(s):* 307-452

transmissionmanuals.com

20.

CAUTION:

Make sure the transmission fluid fill plug is tightened to the correct specification. Failure to follow this instruction may result in damage to the transmission.

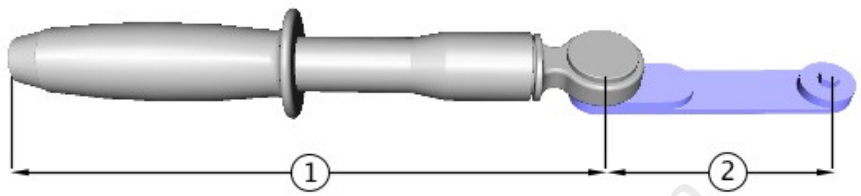

E194197

- To make sure the transmission fill plug is torqued to the correct specification. Using the special tool and torque wrench the following calculation steps must be followed.
- Step 1. Multiply 35 Nm by the effective length of the torque wrench (1).
- Step 2. Add the effective length of the special tool (2) to the effective length of the torque wrench (1).
- Step 3. Divide the total of step 1 by the total of step 2.
- Step 4. Set the torque wrench to the figure arrived at in step 3.
- Tighten the transmission fluid fill plug to the torque given by the calculation.

21.

- Remove the special tool.
  Special Tool(s): 307-452

22. Clean the area around the filler plug, wipe away any excess fluid and remove the container.

transmissionmanuals.com

23.

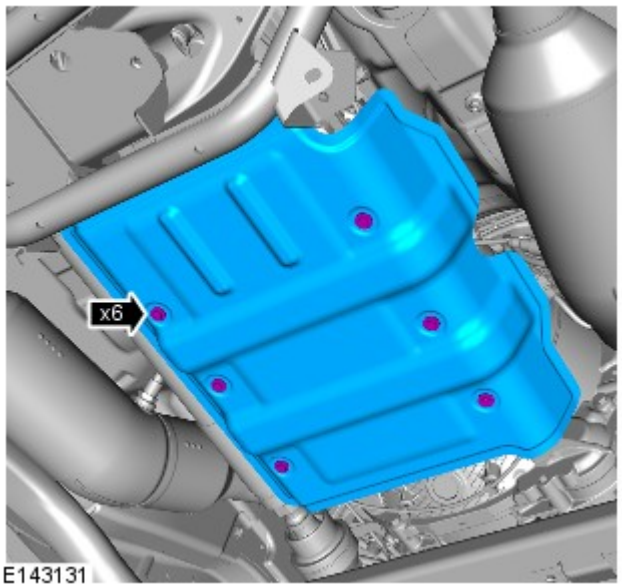

Torque: **9 Nm**

24.

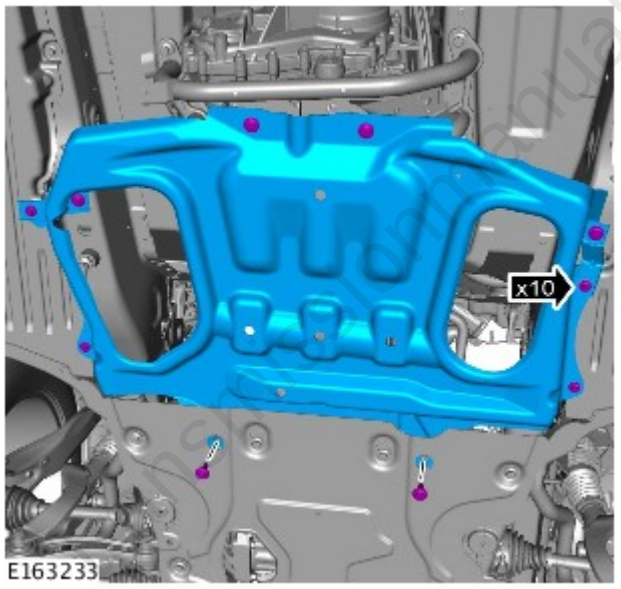

Torque:

M10 **60 Nm**

M6 **10 Nm**

25. Lower the vehicle.

26. Disconnect the Land Rover approved diagnostic equipment from the vehicle.

transmissionmanuals.com